City Of Wyoming - Department Of Building Safety
26885 Forest Blvd., PO Box 188
Wyoming, MN 55092
Phone (651) 462-4947 Fax (651) 462-0576

Building Site Address: _____

Commercial Plan Review Introduction

Commercial New Buildings and Additions

The architect of record must complete the commercial plan review worksheet and related attachments B – G in their entirety. Provide specification number or plan detail number and other information requested. Explain responses and provide calculations as requested or applicable. Building code section or ordinance numbers are given to direct you to the relevant code sections. Complete and accurate information will expedite the plan review process.

I hereby certify that this City of Wyoming Plan Review was completed by me or under my direct supervision, and that I am a duly registered architect or engineer under the laws of the State of Minnesota.

Date: _____

Name: _____
(Please Print)
Signature: _____

Registration #: _____

Contents:

Attachments	Subject	Page
A	Commercial Building Permit Requirements	2
B	Application for Commercial Permit	3
C	Commercial Plan Review for Code Compliance	4-9
D	Total Occupant Load Calculations	12
E	Total Allowable Floor Area Calculations	10 & 11
F	Required Plumbing Facilities	12
G	Special Inspection and Testing Schedule	13
H	Accessibility Requirements Summary	14-23

Additional Permit Applications That May Need To Be Submitted With This Packet

Sign Permit Application
Heating, Ventilation & A/C Permit Application
Plumbing Permit Application
Sewer & Water Connection Permit Application
Septic System Permit Application

Reviewed For Code Compliance

_____
Plan Reviewer Date

Building Permit #_____

City Use Only

Commercial Building Permit Requirements
Attachment A

The following material must accompany a commercial building permit application. Applications are not considered complete until all of the required information is submitted. Plan review fee's will be charged and must be paid whether a building permit is issued or not.

ONCE ALL ITEMS ARE SUBMITTED A MINIMUM OF TEN (10) WORKING DAYS ARE REQUIRED TO PROCESS THE APPLICATION.

1. City of Wyoming Plan Review Worksheets, Attachments B-G completed and signed by a state licensed architect or engineer.
2. Two complete sets of plans. Plans must include architectural, structural, HVAC, plumbing, fire sprinkler system, fire alarm system, site, grading, and landscape plans. Plans must be wet-signed by the appropriate design professionals.
   a. Survey, site, & landscape plan showing the following items:
      i. Zoning of the property.
      ii. Statement of proposed use for the building.
      iii. Date(s) Conditional Use Permit(s) or the Site Plan were approved.
      iv. Building location with setbacks from right-of-way, property lines, well, septic system, wetlands. Include existing buildings on the property drainage easements, & utility easements.
      v. All adjacent streets, alleys, and curb cuts.
      vi. Proposed driveway access(es) with elevations.
      vii. Proposed parking area, indicating the number of parking spaces, including handicap accessible spaces, and the dimensions of such. *See Minnesota Rules Chapter 1341.*
      viii. North point & scale.
      ix. Location and placement of all outdoor lighting.
      x. Building foundation elevation(s).
      xi. Drainage and final grade elevations.
      xii. Screening of mechanical areas on the building.
      xiii. Storage, trash, recycling areas, and screening.
3. Two specifications books (if applicable).
4. Plumbing Permit Application with plans approved by the State of MN Department of Labor & Industry.
5. Heating Permit Application with HVAC plans designed and signed by a state licensed engineer.
6. Structural soil investigation report at the buildings location.
7. Automatic Fire Sprinkler system design (if required). The State of Minnesota Department of Labor & Industry must approve the design; review of the design may take up to eight weeks.
8. Types and quantities of all hazardous materials that will be used and/or stored in the building and on the site; with a plan for the disposal of hazardous waste if generated.
9. Documentation for all fire rated assemblies and firestopping materials.
10. Approval letter from other governmental agencies if required. (i.e. State / County Health Dept., Watershed District, etc.)
11. Sign Permit Application(s).
12. A Sewer & Water Connection Permit Application or a Septic System Permit Application.

Application for COMMERCIAL Permit

Attachment B

Project Name _____

Project Address _____

Property Legal Description: Lot____ Block____ Subdivision_____

# of Acres_____ Section #_____ Zone_____ PIN (Tax) Number R21._____

Describe Work Applied For _____

Estimated Value of Work (labor and materials) TOTAL $ _____

General Contractor _____ Contact _____

Address_____

Phone _____ Fax# _____ Email _____

Property Owner(s) _____ Contact _____

Address_____

Phone _____ Fax# _____ Email _____

Architect of Record _____ Contact _____

Address_____

Phone _____ Fax# _____ Email _____

Structural Engineer _____ Contact _____

Address_____

Phone _____ Fax# _____ Email _____

Mechanical Engineer _____ Contact _____

Address_____

Phone _____ Fax# _____ Email _____

The issuance of a permit and inspections conducted do not constitute a guarantee or warranty from the City. The applicant hereby agrees to do all work in accordance with the ordinances of the City of Wyoming, State Building Code, and the requirements of the Department of Building Safety.

APPLICANT NAME _____ DATE _____
(Please Print)

APPLICANT SIGNATURE _____

Commercial Plan Review for Code Compliance
Attachment C

Provide specification section number or plan detail number in response to the information requested.

Basic Design Information

State Statute 326.03. The architectural drawings must be stamped and signed by a Minnesota registered architect. The structural drawings must be stamped and signed by a Minnesota registered structural engineer. The mechanical drawings must be stamped and signed by a Minnesota registered mechanical engineer.

MSBC 301	Occupancy Group(s)	_____
MSBC 508.	Mixed occupancies. Each portion of the building shall be individually classified as to use. The building shall be classified as either a nonseparated use or a separated use in accordance with this section. Indicate if the building is:	
MSBC 508.3.	Non-Separated	Use _____ Ref. _____
MSBC 508.4.	Separated	Use _____ Ref. _____
MSBC 1004	Occupant Load (See attachment E)	_____
MSBC 601	Type of Construction	_____
MSBC 503	Allowable Area, (See attachment D)	_____
Actual Area		_____
MSBC Table 503	Allowable Height & Number of Stories	_____
	Actual Height & Number of Stories	_____

Setbacks to Property Lines Front _____ Rear _____

Side 1 _____ Side 2 _____

MSBC 504.	Height Modifications	Yes_____ No_____ Reference_____
MSBC 506.	Area Modifications (See Attachment D)	Yes_____ No_____ Reference_____
MSBC 507.	Unlimited Area	Yes_____ No_____ Reference_____
MSBC 903.	Are automatic sprinklers installed?	Yes_____ No_____ Reference_____
MSBC 905.3.	Are standpipes installed?	Yes_____ No_____ Reference_____
MSBC 701.1.	Are there fire-resistive walls or horizontal assemblies?	Yes_____ No_____ Reference_____
MSBC 706.	Fire walls	Yes_____ No_____ Reference_____
MSBC 706.1.1.	Party walls	Yes_____ No_____ Reference_____
MSBC 707.	Fire barrier walls	Yes_____ No_____ Reference_____
MSBC 708.	Fire partitions	Yes_____ No_____ Reference_____
MSBC 709.	Smoke barriers	Yes_____ No_____ Reference_____
MSBC 710.	Smoke partitions	Yes_____ No_____ Reference_____
MSBC 711.	Horizontal assemblies	Yes_____ No_____ Reference_____
MSBC 712.	Vertical openings	Yes_____ No_____ Reference_____
MSBC 713.	Shafts enclosures	Yes_____ No_____ Reference_____

PLANS MUST INCLUDE ALL FIRE-RESTIVE ASSEMBLIES, LOCATIONS, AND CONSTRUCTION DETAILS.

MSBC 509. Areas that are incidental to the main occupancy shall be separated. Yes ____ NA ____ Reference_____

MSBC 509.4.2. The incidental use area shall be separated by construction capable of resisting the passage of smoke. Yes ____ NA ____ Reference_____

MSBC 505. Mezzanines and equipment platforms shall comply with this section. Yes ____ NA ____ Reference_____

MSBC Table 601. Provide fire resistive ratings for the following building elements based on type of construction.

Structural frame Rating _____

Exterior bearing walls Rating _____

Exterior non-bearing walls Rating _____

Interior bearing walls Rating _____

Interior non-bearing walls Rating _____

Floor construction Rating _____

Roof construction Rating _____

MSBC Table 602. Provide fire resistive ratings for the following based on fire separation distance (property lines).

Exterior bearing walls Rating _____

Exterior non-bearing walls Rating _____

MSBC 705.2. Projections extending beyond the floor area must comply with this section. Yes ____ NA ____ Reference_____

MSBC 704.8. The maximum area of unprotected and protected openings in an exterior wall in any story shall not exceed the values set forth in MSBC Table 705.8. Yes ____ NA ____ Reference_____

MSBC 705.8.5. Openings in exterior walls in adjacent stories shall be separated vertically. Yes ____ NA ____ Reference_____

MSBC 705.11. Parapets shall be provided on exterior walls of buildings. Yes ____ NA ____ Reference_____

MSBC 706. Firewalls shall provide a complete separation. Yes ____ NA ____ Reference_____

MSBC 706.2. Firewalls shall have sufficient structural stability under fire conditions to allow collapse of construction on either side without collapse of the wall for the duration of time indicated by the required fire-resistance rating. Yes ____ NA ____ Reference_____

MSBC 706.4. Firewalls shall have a fire-resistance rating of not less than that required by Table 706.4. Yes ____ NA ____ Reference_____

MSBC 707. Fire barriers used for separation of vertical exit enclosures, exit passageways, horizontal exits, incidental use areas, to separate different occupancies or to separate a

single occupancy into different fire areas, shall comply with this section. Yes ____ NA ____ Reference_____

MSBC 708. Fire partitions shall comply with this section.

These include:

1. Walls separating dwelling units Yes ____ NA ____ Reference_____
2. Walls separating sleeping units in R-I Occupancies Yes ____ NA ____ Reference_____
3. Corridor walls. Yes ____ NA ____ Reference_____
4. Elevator Lobby Separation. Yes ____ NA ____ Reference_____

MSBC 708.3. Fire partitions shall be not less than 1 hour rated. Yes ____ NA ____ Reference_____

MSBC 709.3. Smoke barriers shall be 1 hour rated. Yes ____ NA ____ Reference_____

MSBC 710. Smoke partitions shall comply with this section. Yes ____ NA ____ Reference_____

MSBC 711. Horizontal assemblies shall comply with this section. Yes ____ NA ____ Reference_____

MSBC 712. Vertical openings shall comply with this section. Yes ____ NA ____ Reference_____

MSBC 713. Openings through a floor/ceiling assembly shall be protected by a shaft enclosure. Yes ____ NA ____ Reference_____

MSBC 713.13.1. Openings into laundry and refuse chutes shall not be located in exit access corridors. Yes ____ NA ____ Reference_____

MSBC 714. Through penetrations and membrane penetrations shall comply with this section. Yes ____ NA ____ Reference_____

Documentation of all firestop systems is included with the plans. Yes ____ NA ____ Reference_____

MSBC 715. Joints installed in or between rated walls, floors, ceilings, and roofs shall comply with this section. Yes ____ NA ____ Reference_____

Documentation of all fire-resistant joint systems is included with the plans. Yes ____ NA ____ Reference_____

MSBC 704. The fire-resistance rating of structural members shall comply with this section. Yes ____ NA ____ Reference_____

Documentation of all fire-resistive structural members is included with the plans. Yes ____ NA ____ Reference_____

MSBC 716. Openings required to be protected shall comply with this section. Fire doors, fire doors with glazing, and shutters shall have a minimum rating as indicated in Table 716.5. Yes ____ NA ____ Reference_____

MSBC 716.6. Fire-protection-rated glazing shall comply with this section and Table 716.6. Yes ____ NA ____ Reference_____

MSBC 717.2. Fire dampers, smoke dampers, combination fire/smoke dampers, and ceiling dampers located within air distribution and smoke-control systems shall be installed in accordance with the requirements of this section, the manufacturer's installation instructions, and listing. Yes ____ NA ____ Reference_____

MSBC 718.2. In combustible construction, fireblocking shall be installed to cut off concealed draft openings. Yes ____ NA ____ Reference_____

MSBC 718.3. In combustible construction, draftstopping shall be installed in floors, such that any horizontal area does not exceed 1,000 square feet. Yes ____ NA ____ Reference_____

MSBC 718.4. In combustible construction, draftstopping shall be installed in attics and concealed roof spaces, such that any horizontal area does not exceed 3,000 square feet. Yes ____ NA ____ Reference_____

MSBC 801. Interior finishes shall comply with this section. Yes ____ NA ____ Reference_____

MSBC 901.2. Any fire protection system for which an exception or reduction to the provisions of this code has been granted shall be considered to be a required system. Submit information and code sections pertaining to all exceptions or reductions in code requirements utilized in this project. Yes ____ NA ____ Reference_____

Code exceptions _____

Code reductions _____

MSBC 901.2. Fire protection systems shall be installed, repaired, operated, and maintained in accordance with this code and the Minnesota Fire Code. Yes ____ NA ____ Reference_____

MSBC 907.2. An approved manual, automatic, or manual and automatic fire alarm system shall be provided in new buildings and structures in accordance with Sections 907.2.1 through 907.2.24 and NFPA 72. Yes ____ NA ____ Reference_____

MSBC 1004.3. Every room that is an assembly occupancy shall have the occupant load posted. Yes ____ NA ____ Reference_____

MSBC 1005.3. Egress width shall comply with this section. Yes ____ NA ____ Reference_____

MSBC 1005.4. The egress width shall be maintained to the termination of the means of egress. Yes ____ NA ____ Reference_____

MSBC 1003.2. The means of egress shall have a ceiling height of not less than 7 feet-6 inches. Yes ____ NA ____ Reference_____

MSBC 1003.3. Protruding objects in the means of egress shall comply with this section. Yes ____ NA ____ Reference_____

MSBC 1011.1. Exits and exit access doors shall be marked by an approved exit sign readily visible from any direction of egress travel. Yes ____ NA ____ Reference_____

MSBC 1011.5-1011.6.3. Exit signs shall be illuminated at all times and have an emergency backup power source. Yes ____ NA ____ Reference_____

MSBC 1006.1. Means of egress, including the exit discharge, shall be illuminated at all times. Yes ____ NA ____ Reference_____

MSBC 1006.3. Exits, exit access, exit discharge, and the exterior of an exit door require an emergency backup power source. Yes ____ NA ____ Reference_____

MSBC 1013. Guards shall comply with this section. Yes ____ NA ____ Reference_____

MSBC 1013.4. Openings in guards shall be installed *so* that a 4-inch diameter sphere cannot pass through. Yes ____ NA ____ Reference_____

MSBC 1008.1.1. All exit doors shall have a minimum 32" clear width by 80" clear height. Yes ____ NA ____ Reference_____

MSBC 1008.1.2. Doors shall swing in the direction of egress travel when serving an occupant load of 50 or more and in H occupancies. Yes ____ NA ____ Reference_____

MSBC 1008.1.4.2. Power-operated doors shall comply with this section. Yes ____ NA ____ Reference_____

MSBC 1008.1.4.4. Security grills in groups B, F, M, and S occupancies shall comply with this section. Yes ____ NA ____ Reference_____

MSBC 1008.1.9. Doors shall be readily openable from the inside without the use of a key or special knowledge or effort. Identify lock or latch type at all doors. Yes ____ NA ____ Reference_____

MSBC 1008.1.10.1. Panic hardware shall comply with this section. Yes ____ NA ____ Reference_____

MSBC 1009.4. Stairways serving an occupant load over 50 shall be at least 44 inches in width. Yes ____ NA ____ Reference_____

MSBC 1009.15. Stairways shall have handrails on each side. Yes ____ NA ____ Reference_____

MSBC 1012.2. Handrail height shall be uniform, not less than 34 inches and not more than 38 inches. Yes ____ NA ____ Reference_____

MSBC 1012.9. The maximum spacing of intermediate handrails shall be 60 inches. Yes ____ NA ____ Reference_____

MSBC 1012.3. Handrail shape, size, and spacing shall comply with this section. Yes ____ NA ____ Reference_____

MSBC 1009.16, 1209.3.1 & MSMC 306.5. Buildings where any mechanical equipment is located on the roof shall have stairs complying with these sections. Yes ____ NA ____ Reference_____

MSBC 1015. One exit is allowed when the maximum occupant load meets the requirements of Table 1015.1 or Table 1021.2(2). Two exits are required from any space in accordance with section 1015.2.1. Two or more exits are required when the occupant load exceeds the values in Table 1021.2(2). Yes ____ NA ____ Reference_____

MSBC 1016. Exit travel distance shall comply with this section and Table 1016.2. Yes ____ NA ____ Reference_____

MSBC 1018.1. Corridors shall be fire-resistance rated per Table 1018.1. Fire rated corridors shall comply with MSBC section 708 for fire partitions. Yes ____ NA ____ Reference_____

MSBC Table 1018.2. Corridor width shall be in accordance with this table. Yes ____ NA ____ Reference_____

MSBC 1018.4. Dead end corridors must not exceed 20 feet. Yes ____ NA ____ Reference_____

MSBC 1022.1. Interior exit stairways shall be enclosed with a minimum 1-hour fire-resistance rated enclosure. Yes ____ NA ____ Reference_____

MSBC 1028.2. The main exit of group A occupancies with an occupant load greater than 300 shall accommodate at least half of the total occupant load of the space the exit serves. Yes ____ NA ____ Reference_____

MSBC 1029. In basements and sleeping rooms below the fourth story of group R occupancies provisions shall be made for emergency escape and rescue. Yes ____ NA ____ Reference_____

MSBC 1207.2. Walls and ceilings separating dwelling units shall have a sound transmission class of not less than 50. Yes ____ NA ____ Reference_____

MSBC 1208.2. Habitable spaces shall have a minimum ceiling height of 7'- 6". Yes ____ NA ____ Reference_____

MSBC 1210.2. Walls within 2 feet of urinals and water closets shall have a smooth, hard, nonabsorbent surface, to a height of 4 feet above the floor. Paint is not acceptable. Yes ____ NA ____ Reference_____

MSBC 1404.2. A weather resistive barrier shall be installed over exterior sheathing. Yes ____ NA ____ Reference_____

MSBC 1704. Special inspectors shall be employed. Complete the special inspection and testing schedule (Attachment F). Yes ____ NA ____ Reference_____

MSBC 1807.1. Basements and similar areas shall be dampproofed or waterproofed per the subsurface watertable investigation required by section 1803.5.4. Yes ____ NA ____ Reference_____

MSBC 2603.4. Foam plastic shall be separated from the interior of the building by an approved thermal barrier. Yes ____ NA ____ Reference_____

MSBC Rule Chapter 1307. Elevators shall comply with this Chapter. Yes ____ NA ____ Reference_____

NEC 230.72c. Each occupant in a multi-occupancy building must have access to main service from a common area. Yes ____ NA ____ Reference_____

MSFC 505.1. Reflectorized Address numbers must be located at building or tenant entrance. Multi-tenant buildings and buildings with multiple entrances must also have identification on all entrances. Yes ____ NA ____ Reference_____

City Code Sec. 40-724. All roof and grade mounted HVAC units and equipment shall be hidden from view. Screen materials shall be reviewed and approved prior to construction or installation. Yes ____ NA ____ Reference_____

MSBC Rule 1303.1500. Recycling space must be properly sized and shown on the plan. Yes ____ NA ____ Reference_____

Total Occupant Load Calculations
Attachment D

Design occupant load. Show breakdown of various occupancies, fire barrier walls or other occupant load break points for determining total design occupant load.
MSBC 1004

Room name or number	Floor area per occupant. MSBC Table 1004.1.2.

Total Allowable Floor Area Calculations
Attachment E

MSBC 503.1, MSBC 504.1, and MSBC 506.
If any allowable height or area modifications are used, please specify which and show calculations. See page 11 for worksheet.

Total Allowable Floor Calculations
Optional Worksheet for Attachment E
Allowable Increases per MSBC 506

Equation 5-1: A_a = Max allowable sf area per floor

A_t = Allowable area per table 503

I_f = Area % increase per equation 5-2

I_s = % increase for sprinklers per Section 506.3

$A_a = \{A_t + [A_t \times I_f] + [A_t \times I_s]\}$ = (total allowable square foot maximum increase)

A_a = { ___sf + [_____sf x ___%]+ [_____sf x ___%]} = _____sf max

A_t At I_f A_t I_s A_a

Equation 5-2: I_f = Max % increase for frontage > 20'

F = Building perimeter open to > 20' public way

P = Perimeter of entire building

W = Width of public way with min open 20' up to 30' max

$I_f = \{[F / P] - 0.25\} \times W / 30$ = % increase for frontage

I_f = { [_____/_____] - 0.25} x _____/ 30 = % increase

F P W I_f

Givens: MSBC Table 503

Type of Construction: _____

Occupancy Classification: _____

P = _____

F = _____

W = _____

*Required Plumbing Facilities**
Attachment F

MSBC Chapter 29
Required number of plumbing facilities

Total Occupant Load from Attachment D:

Use additional sheets if necessary.

Minimum number of fixtures per Table 2902.1:

Total occupant load: _____

Male occupant load: _____

Female occupant load: _____

Water closets

Male _____ per _____ Total male fixtures _____ Water closets _____ Urinals _____.

Total accessible fixtures per MN Accessibility Code 1341 Water closets _____ Urinals _____.

Female _____per _____ Total female water closets _____.

Total accessible fixtures per MN Accessibility Code 1341 _____.

Lavatories

Minimum number of fixtures per Table 2902.1:

Male per _____. Total male lavatories _____.

Total accessible lavatories per MN Accessibility Code 1341 _____.

Female per _____. Total male lavatories _____.

Total accessible lavatories per MN Accessibility Code 1341 _____.

Drinking fountains**

Ratio: per _____. Total drinking fountains _____.

Total accessible drinking fountains per MN Accessibility Code 1341 _____.

Kitchen sinks Total _____.

Service sinks Total _____.

*****Bathrooms in retail spaces shall be in a public location. They shall not be in a stock room, storage room, or any other private location. The Minnesota State Building Code makes it clear that bathrooms must be available for the occupants and customers.

******Drinking fountains are not required in structures or tenant spaces of a group B or M occupancy not exceeding 2000 gross square feet of floor area. When provided, drinking fountains must be high-low per the Accessibility Code MSAC 602.

Special Structural Testing and Inspection Program Summary Schedule
Attachment G

This schedule to be filled out and included with the building permit application.

Project Name _____ Location _____

Project No. _____ Permit No. _____

Technical (2)		Description (3)	Type of Inspector (4)	Report Frequency (5)	Assigned Firm (6)
Section	**Article**				

Note: **This schedule shall be filled out and included in a Special Structural Testing and Inspection Program.**
(If not otherwise specified, assumed program will be "Guidelines for Special Inspection & Testing" as contained in the State Building Code and as modified by the state adopted IBC.)
*****A complete specification-ready program can be downloaded directly by visiting CASE/MN at www.acecmn.org*****

(1) Permit No. to be provided by the Building Official
(2) Referenced to the specific technical scope section in the program.
(3) Use descriptions per IBC Chapter 17, as adopted by Minnesota State Building Code.
(4) Special Inspector – Technical (SIT); Special Inspector – Structural (SIS)
(5) Weekly, monthly, per test/inspection, per floor, etc.
(6) Name of Firm contracted to perform services.

ACKNOWLEDGEMENTS

(Each appropriate representative must sign below)

Owner _____ Firm _____ Date _____

Contractor _____ Firm _____ Date _____

Architect _____ Firm _____ Date _____

Structural Eng. of Rec. _____ Firm _____ Date _____

Special Inspector - Technical _____ Firm _____ Date _____

Special Inspector - Structural _____ Firm _____ Date _____

Testing Agent _____ Firm _____ Date _____

Fabricator _____ Firm _____ Date _____

If requested by engineer/architect of record or building official, the individual names of all prospective special inspectors and the work they intend to observe shall be identified as an attachment.

Accessibility Summary
For
Business and Mercantile
Attachment H

This document provides basic and fundamental information for facilities and elements. It is not intended to replace or be a substitute for the requirements found in the 2012 International Building Code, ICC/ANSI A.117 – 2009, and as amended by the Minnesota Accessibility Code, Chapter 1341.

Parking – MSBC 1106:

- Accessible parking spaces shall be provided in accordance with the following table. The total number of parking spaces provided within the site shall be used to determine the number of accessible parking spaces

Total Parking in Lot	Required Minimum Number of Accessible Spaces	Van Accessible Spaces Required
1 to 25	1	1
26 to 50	2	1
51 to 75	3	1
76 to 100	4	1
101 to 150	5	1
151 to 200	6	1
201 to 300	7	2
301 to 400	8	2
401 to 500	9	2
501 to 1,000	2 percent of total	1 in every 6 accessible spaces
1,001 and over	20 plus 1 for each 100 over 1,000	

- Car and van parking spaces shall be 96 inches wide with an adjacent 60-inch wide access aisle; two parking spaces may share an aisle. ANSI 502.2.
- Each access aisle shall be marked with the designation "No Parking". ANSI 502.4.4.
- Each access aisle shall connect to an accessible route. Accessible spaces shall be located as near as possible to an accessible entrance. ANSI 502.8.
- The slope of each accessible parking space and associated access aisle shall not exceed 1:48. ANSI 503.4.
- Each accessible space must have a sign showing the international Symbol of Accessibility and notification that violators are subject to a fine of up to $200. MN Statute 169.346, ANSI 502.7.
- Each sign shall be centered at the head end of the space and mounted with the bottom of the sign 60" – 66" above the parking surface. ANSI 502.7.

Exterior Access:

- An exterior accessible route shall be at least 4 feet wide with a slope not to exceed 1:20. ANSI 403.5.4.
- The surface of the exterior accessible route shall be stable, firm, and slip resistant. ANSI 302.1.
- The exterior accessible route shall be the shortest, most direct route possible and shall coincide with the general route of travel. MSBC 1106.6.

Curb Ramps – ANSI 406:

- Curb ramps shall have a maximum slope of 1:12.
- The slope of surfaces adjoining the curb ramp shall not exceed 1:20.
- The transition from curb ramp to adjoining surface shall be flush and free of abrupt changes in height.
- The minimum width of the curb ramp shall be 36 inches excluding flared sides.
- Curb Ramp Flares shall not be steeper than 1:10.

Accessible Building Entrances:

- At least 60 percent of all public entrances must be accessible. MSBC 1105.1.
- Accessible doors shall have a minimum clear opening of 32 inches measured with the door open 90 degrees. ANSI 404.2.2.
- The threshold shall be no higher than 1/2 inch. ANSI 404.2.4.
- Two doors in a series must be separated by at least 48 inches plus the width of any door swinging into the space. The space between the doors shall also provide a turning space 60" in diameter. ANSI 404.2.5.
- Door hardware shall be operable with one hand and not require tight grasping, pinching, or twisting of the wrist, and shall be mounted 34" – 48" above the floor. ANSI 404.2.6.
- Level landings shall be provided on both sides of the door (exterior landings may slope 1/4 inch per foot). MSBC 1008.1.6.

Interior Circulation:

- Corridors serving 50 or more occupants shall have a minimum clear width of 44 inches (36 inches if less than 50 occupants). MSBC 1017.2.
- Parallel approach public counters and service windows shall have a 36-inch long portion that is no more than 36 inches above the floor. ANSI 904.3.1.
- Forward approach public counters and service windows shall have a 30-inch long portion that is no more than 36 inches above the floor. ANSI 904.3.2.
- Objects along the accessible route between 27 inches and 80 inches above the floor shall protrude no more than 4 inches from the wall. ANSI 307.2.
- Accessible doors shall have a minimum clear opening of 32 inches measured with the door open 90 degrees. ANSI 404.2.2.
- The threshold shall be no higher than 1/2 inch. ANSI 404.2.4.
- Two doors in a series must be separated by at least 48 inches plus the width of any door swinging into the space. The space between the doors shall also provide a turning space 60" in diameter. ANSI 404.2.5.
- Door hardware shall be operable with one hand and not require tight grasping, pinching, or twisting of the wrist, and shall be mounted 34" – 48" above the floor. ANSI 404.2.6.

- Level landings shall be provided on both sides of the door. MSBC 1008.1.4.

Interior Ramps – ANSI 405:

- Ramp runs shall have a running slope greater than 1:20 and not steeper than 1:12. ANSI 405.2.
- The surface of the ramp shall be stable, firm, and slip-resistant. ANSI 302.1.
- Intermediate landings at least 5 feet in length must be provided for every 30-inch rise. ANSI 405.6 and 405.7.
- Landings at least 5 feet in length must be provided at both the top and bottom of the ramp. ANSI 405.7.3.
- Handrails must be provided on both sides of the ramp when the rise is greater than 6 inches. ANSI 405.8.
- The minimum width of a ramp is 36 inches measured between handrails. ANSI 405.5.

Signage – MSBC 1110 & ANSI Chapter 7:

- The International Symbol of Accessibility shall be displayed at accessible toilet and bathing rooms, accessible parking spaces and areas of rescue assistance. MSBC 1110.2.
- Tactile and Braille signage must be provided at restrooms and exit stairways. If room numbers or room names are provided, the signage shall also be tactile and Braille.
- Directional or informational signs shall have lettering which contrasts in color from the background (building directories are not included in this requirement).
- Building entrances that are not accessible shall provide directional signage indicating the shortest route to an accessible entrance. MSBC 1110.6.

Toilet Rooms:

- All newly constructed and altered toilet rooms must be accessible. At least one of each type of fixture or element provided in the room must be accessible. MSBC 1109.2.
- Entrance doors shall have a minimum clear opening of 32 inches measured with the door open 90 degrees. ANSI 404.2.2.
- Two doors in a series must have a minimum separation of 48 inches plus the width of the door swinging into the space. ANSI 404.2.5.
- Door hardware must be operable with one hand, not require tight grasping, pinching, or twisting of the wrist, and operate with no more than 5 Ibs of force. ANSI 404.2.6.
- A door shall not swing over the floor space for any fixture unless the room is for individual use and a 30-inch by 48-inch clear floor space is provided within the room that is clear of the swing of the door. ANSI 603.2.2.

Water Closet:

- A clearance around a water closet 60 inches minimum, measured perpendicular from the side wall, and either 78 inches minimum, measured perpendicular from the rear wall, or 48 inches minimum plus the depth of the water closet fixture, measured perpendicular from the rear wall, shall be provided. ANSI 604.3.1
- The water closet centerline shall be 16 – 18 inches from a sidewall or partition. ANSI 604.2.
- The stall door shall provide a 32-inch clear opening measured with the door open 90 degrees. ANSI 404.1 & 404.8.3.

- Stall door hardware shall be operable with one hand, not requiring tight grasping, pinching, or twisting of the wrist, and operate with no more than 5 lbs. of force. ANSI 404.2.6.
- A 42-inch minimum length horizontal grab bar shall be mounted on the sidewall between 33 inches and 36 inches above the floor, beginning 12 inches from the rear wall. ANSI 604.5.1 & 609.4.
- A vertical grab bar shall be mounted on the sidewall, 18 inches minimum in length with the bottom of the bar located between 39 inches and 41 inches above the floor, and with the centerline of the bar located between 39 and 41 inches from the rear wall. ANSI 604.5.1.
- The rear wall grab bar shall be 36 inches minimum in length, and extend from the centerline of the water closet 12 inches minimum on the side closest to the wall and 24 inches minimum on the transfer side. ANSI 604.5.2.
- The Toilet paper dispensers and sanitary product receptacles shall comply with Section 309.4. Operable parts of dispensers and sanitary product receptacles shall be located within an area 24 inches minimum and 42 inches maximum from the rear wall, 18 inches minimum, and 48 inches maximum above the floor. Dispensers shall not be of a type that control delivery, or does not allow continuous paper flow. ANSI 604.7.

Sinks:

- The rim of the sink shall be no more than 34 inches above the floor. ANSI 606.3.
- A clear floor space 30 inches by 48 inches shall be centered on the sink and positioned for a forward approach to the sink. ANSI 606.2.
- Knee clearance at the front of the counter or lavatory shall be at least 27 inches above the floor. ANSI 306.3.
- Plumbing beneath the sink shall be insulated or otherwise configured to avoid contact. ANSI 606.6.
- Faucets shall be no more than 20 inches from the front edge of the counter or lavatory and be operable with one hand, not require tight grasping, pinching, or twisting of the wrist, and operate with no more than 5 Ibs of force. ANSI 606.4 & 309.

Urinal:

- The rim of the urinal shall be no more than 17 inches above the floor. ANSI 605.2.
- A clear floor space 30 inches by 48 inches shall be centered on the urinal and positioned for a forward approach to the urinal. ANSI 605.3.

Accessories:

- Accessories such as towel, soap, and product dispensers shall be mounted so that the highest operable part of the device is no more than 48 inches above the floor when a side approach is provided or 48 inches above the floor when a front approach is provided. ANSI 308.
- Mirrors located above lavatories, sinks, or counters shall be mounted with the bottom edge of the reflecting surface 40 inches maximum above the floor. Mirrors not located above lavatories, sinks, or counters shall be mounted with the bottom edge of the reflecting surface 40 inches maximum above the floor. ANSI 603.3

Drinking Fountain:

- No fewer than two drinking fountains shall be provided. One drinking fountain shall comply with the requirements for people who use a wheelchair and one drinking fountain shall comply with the requirements for standing persons. Exception: A single drinking fountain that complies with the requirements for people

who use a wheelchair and standing persons shall be permitted to be substituted for two separate drinking fountains. MSBC 1109.5.1.

- Spout outlets of wheelchair accessible drinking fountains shall be 36 inches maximum above the floor. Spout outlets of drinking fountains for standing persons shall be 38 inches minimum and 43 inches maximum above the floor. ANSI 602.4.

Benches:

- Provide an accessible dressing room with an accessible bench with back support that is at least 42 inches long by 20 to 24 inches deep at 17 to 19 inches (maximum) above finish floor. ANSI 803 & 903.

Service Counters:

- Provide an accessible service/sales counter on an accessible route and in a prominent location with a 36-inch minimum width by 36-inch maximum above finished floor elevation. ANSI 904.3.1 & 904.3.2.
- The number of service counters shall comply with Table 1109.12.2. ANSI 1109.12.2.
- One of each type of service/sales counters shall be made accessible. ANSI 1109.12.2.

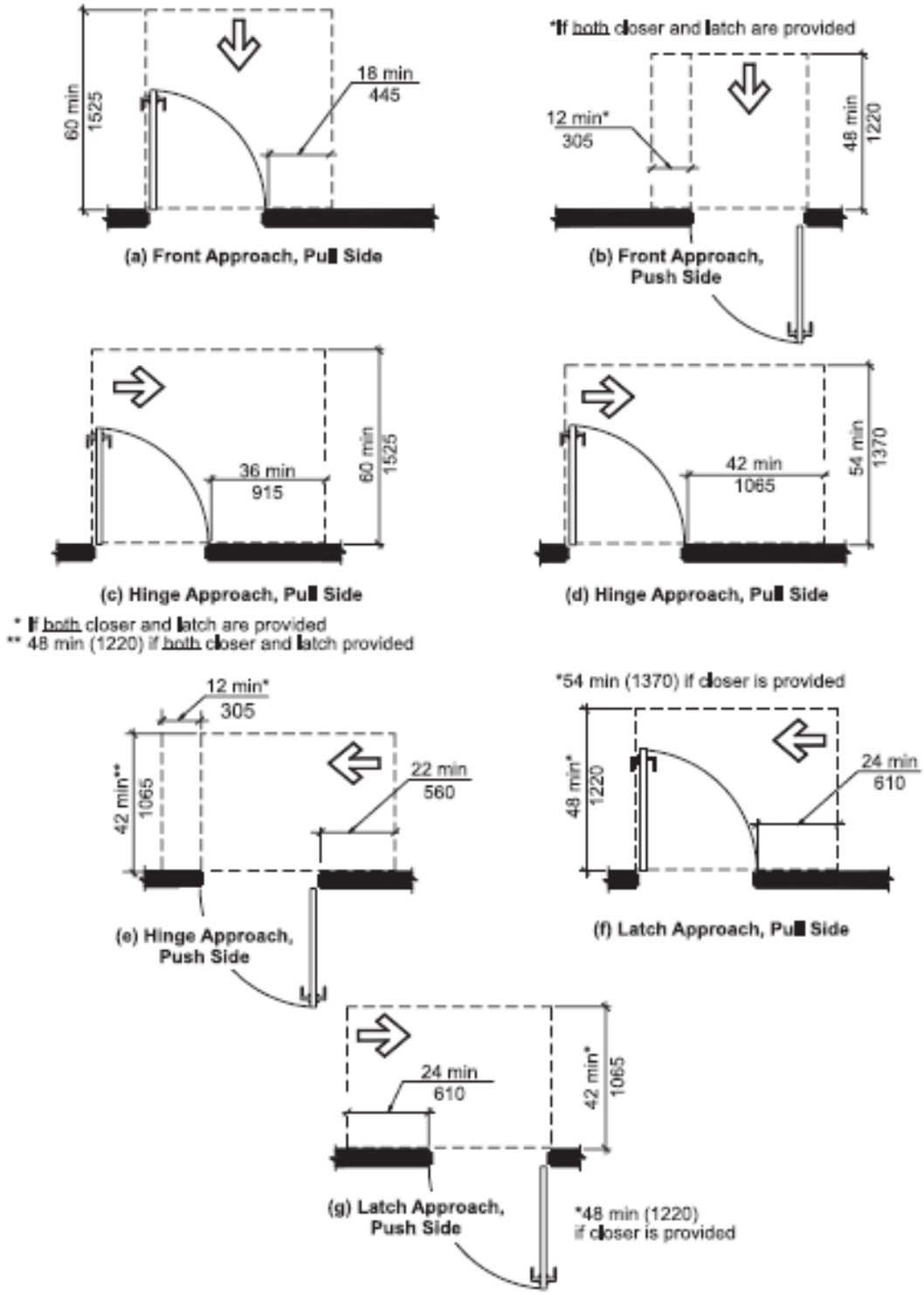

Fig. 404.2.3.1
Maneuvering Clearance at Manual Swinging Doors

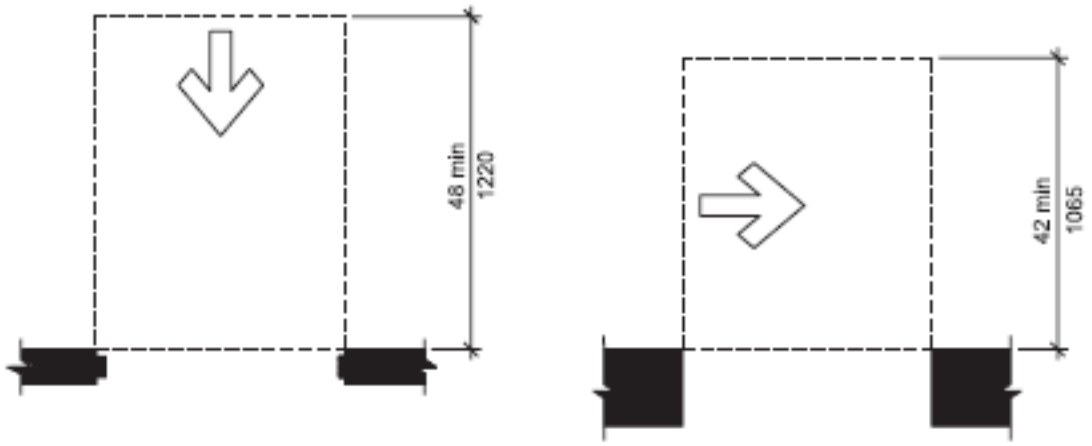

(a)
Front Approach

(b)
Side Approach

Fig. 404.2.3.3
Maneuvering Clearance at Doorways without Doors

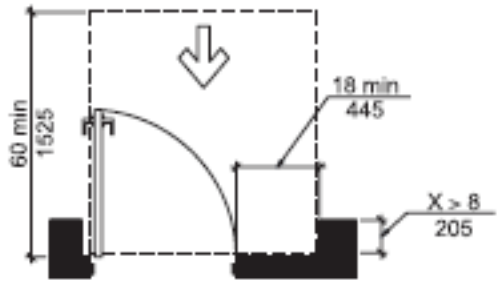

(a)
Pull Side

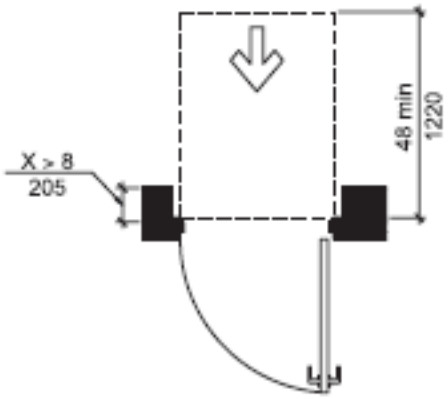

(b)
Push Side

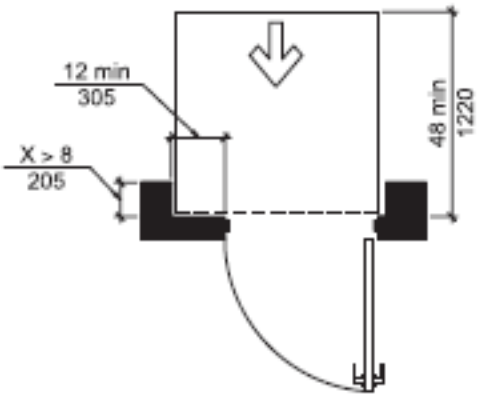

(c)
Push Side, Door Provided
with Both Closer and Latch

Fig. 404.2.3.4
Maneuvering Clearance at Recessed Doors

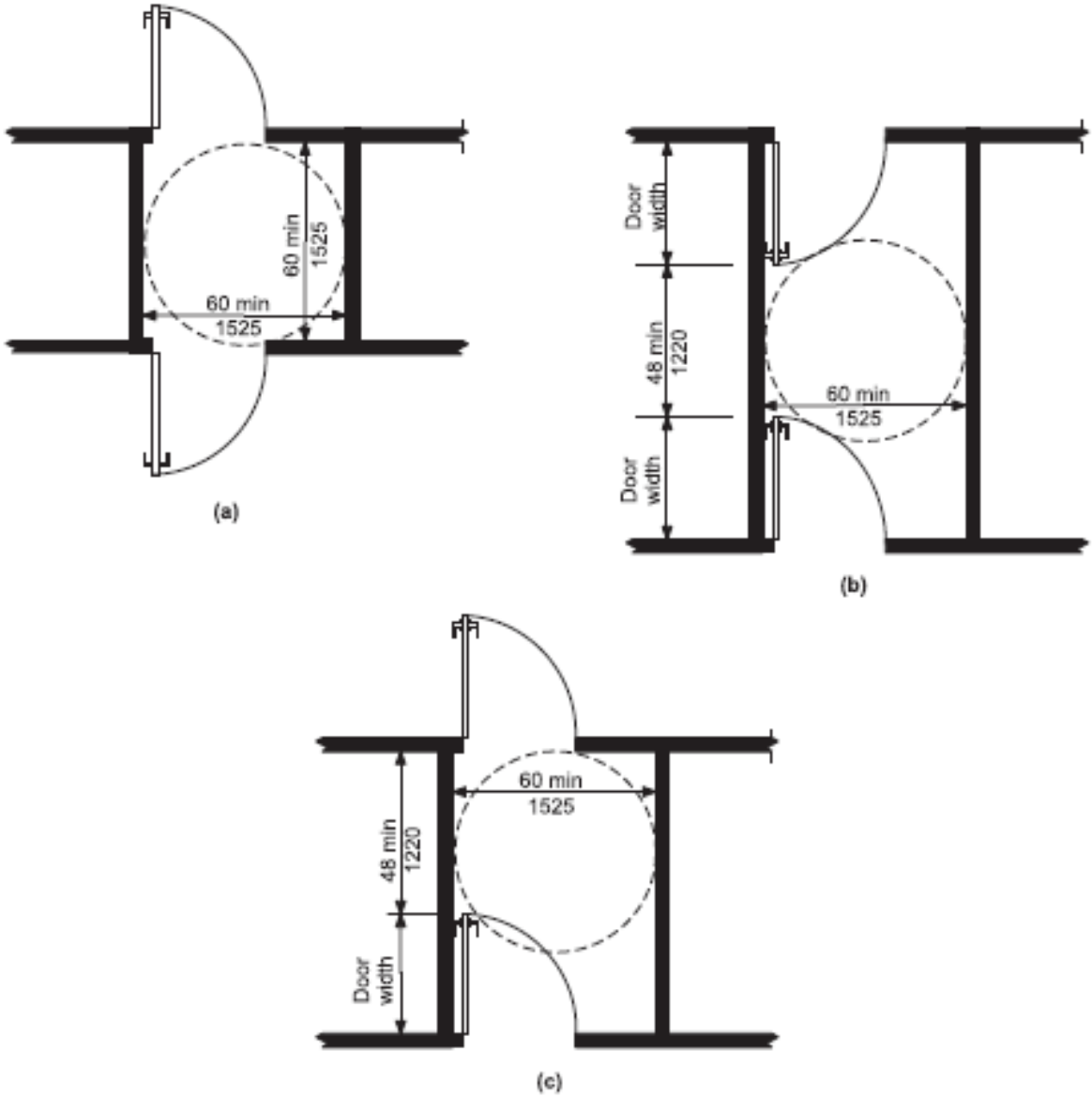

Fig. 404.2.5
Two Doors in a Series

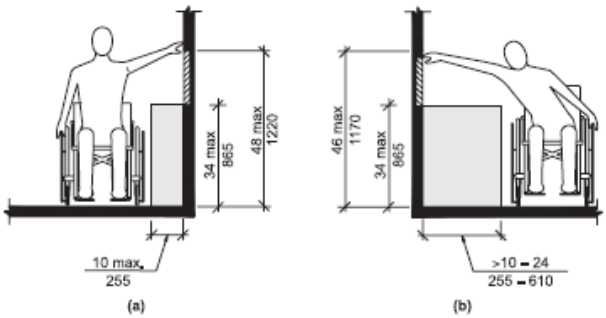

Fig. 308.3.2
Obstructed High Side Reach

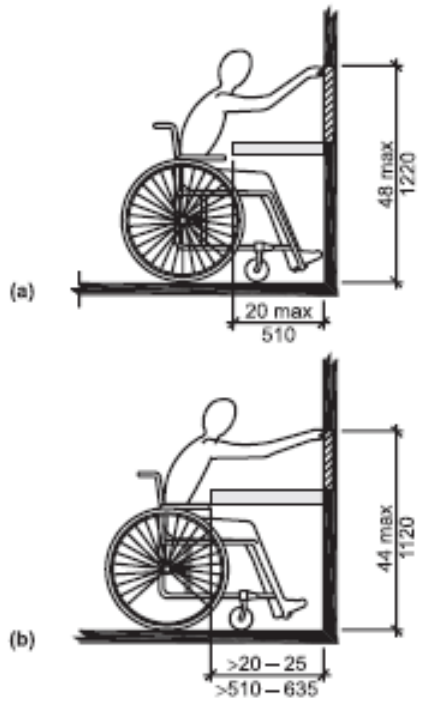

Fig. 308.2.2
Obstructed High Forward Reach

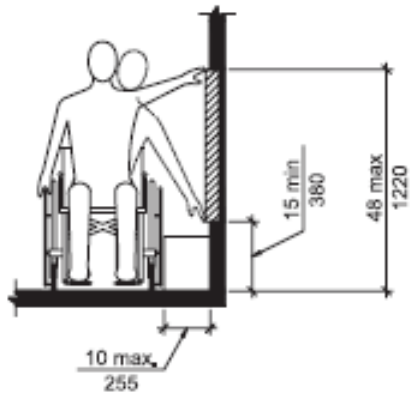

Fig. 308.3.1
Unobstructed Side Reach

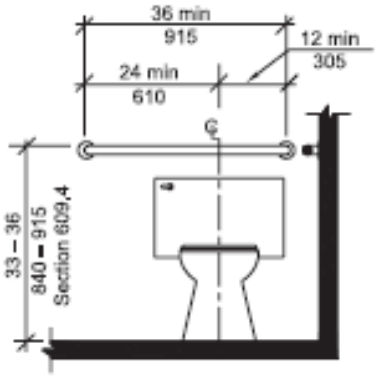

Fig. 604.5.2
Rear Wall Grab Bar for Water Closet

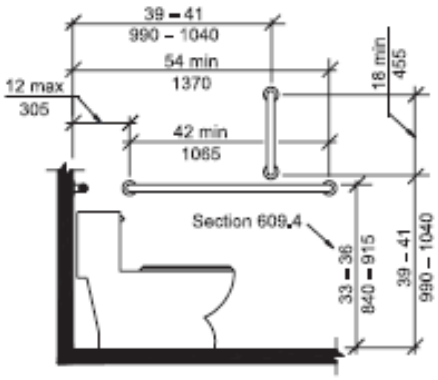

Fig. 604.5.1
Side Wall Grab Bar for Water Closet

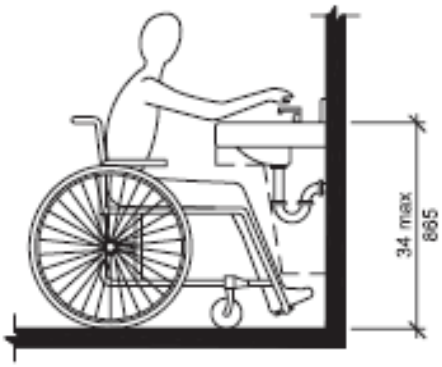

Fig. 606.3
Height of Lavatories and Sinks

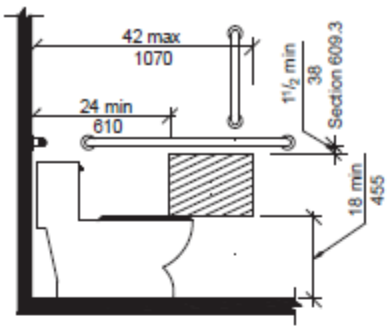

(a) Protruding Dispenser Below Grab Bar

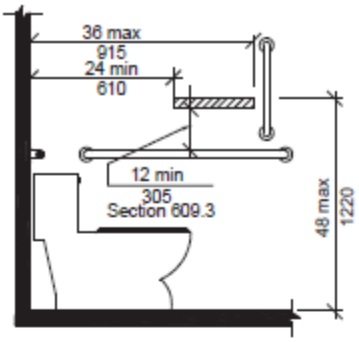

(b) Protruding Dispenser Above Grab Bar

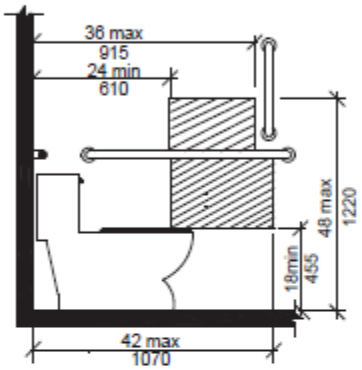

(c) Recessed Dispenser

Note: For children's dimensions see Fig. 604.11.7 dispenser outlet location

FIG. 604.7
DISPENSER OUTLET LOCATION

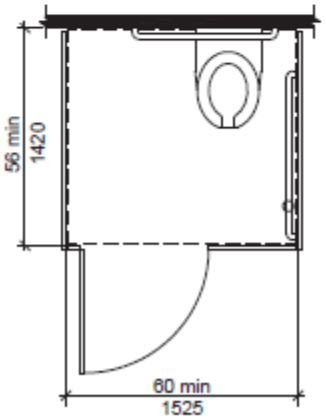

(a) Wall-Hung Water Closet – Adult

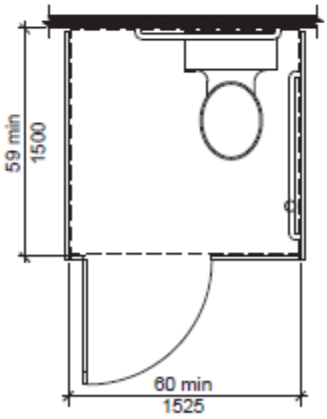

(b) Floor-Mounted Water Closet – Adult
Wall-Hung and
Floor-Mounted Water Closet – Children

FIG. 604.9.2
WHEELCHAIR ACCESSIBLE TOILET COMPARTMENTS