NOTICE:

Applications for building permits will not be reviewed until all of the required information has been submitted, the building site is staked, and the silt fence(s) have been installed. A silt fence escrow of $900.00 is required. 90% is refundable after 4' of sod has been established along the boulevard.

Once all items are submitted and sites staked - a minimum of ten (10) working days are required to process the application.

City Of Wyoming - Department Of Building Safety
26885 Forest Blvd., PO Box 188
Wyoming, MN 55092
Phone (651) 462-4947 Fax (651) 462-3938

Requirements for Application for Building Permit

NEW HOME WITH CITY SEWER AND WATER

ALL FORMS MUST BE COMPLETE

Applications will not be processed if not complete.

Items to be submitted with the building permit application:

1. Completed Building permit application with all of the sub-contractors listed.
2. Copy of Builders State License or a signed waiver for homeowners building their own home.
3. Completed Plumbing permit application. Plumbing must be done by a Licensed Plumber.
4. Completed Heating permit application. Gas piping installers must be licensed with the City.
5. Completed Driveway permit application. (Homes on County roads must have an approved driveway permit from Chisago County)
6. Completed Mailbox Post Assembly application.
7. Completed "New Home Ventilation Worksheet". Ventilation Requirements shall be one of three types: exhaust according to Section N1104.3.1, balanced and HRV/ERV system or other methods according to section N1104.3.3.
8. Completed sewer and water connection permit application.
9. Signed erosion control information sheet. **The erosion control fence must be installed before submitting the building permit application.**
10. Two complete sets of building plans. See attached "Single Family Dwelling Minimum Plan Requirements".
    a. *Dwellings that are constructed slab on-grade. Provisions shall be made to provide for storm protection internally to the dwelling. Storm shelters internal to the dwelling shall be provided in a bathroom or laundry room so as to ensure accessibility and that the storm shelter is not obstructed by storage. Compliance with this requirement shall be based upon Federal Emergency Management Agency (FEMA) guidelines and standards. City Code, Chapter 40, Sec. 40-460, 1, f.*
11. Two copies of a Certificate of Survey, showing the location of the HOUSE, DRIVEWAY, ROADS, Sewer & Water Curb stop locations, and any other buildings on the property. The Survey must include building dimensions, foundation elevations, and setbacks from property lines. The Survey must be signed by a State of Minnesota Registered Land Surveyor.
12. Energy Code Requirements, Minnesota Rules Chapter 1322. Compliance shall be demonstrated through one of the following methods: Table N1102.1.1 R-Values (all building component R-Values and Window U-Values must be shown on the building plans), Table N1102.1.2 Equivalent U-Factors, UA Alternative or Engineered Systems Alternative. A Building Certificate, completed by the builder, shall be posted in a permanently visible location in the building and a copy returned to the city.
13. Stucco: if the home will have stucco the General Contractor & Stucco Contractor must sign the form titled "Stucco Attachment".
14. Notification that a stake (with a red & white flag) has been placed in the center of the driveway, at the property line, so an address may be assigned. (The permit will not be issued without an address).
15. Truss designs and specifications are to be furnished at the framing inspection. Complicated roof designs may need to be submitted with the building permit application.

At this time the building must be staked out by the surveyor so a site inspection can be done. After the plans have been reviewed, and if all requirements are met, a building permit will be issued.

Your building permit does not include the inspection of electrical work. A separate Request for Electrical Inspection form with the required fees must be submitted to the Board of Electricity at or before commencement of any electrical installation that is required by law to be inspected. Electrical inspections in the City of Wyoming are done by Gene Boyle. He can be reached at (763) 633-9148, 7:00 – 8:30 am.

********** **A Certificate of Occupancy is required for all buildings** **********

These Items must be completed before a Certificate of Occupancy will be issued:

a. Approval of all required inspections.
b. House numbers must be posted - 4" minimum height in view of the street.
c. An all-weather surface driveway must be in place (Class V or better).
e. Sewer and water connection ties on the City of Wyoming form must be submitted.
f. The ORSAT test results for the furnace and a combustion air worksheet must be submitted

***Minimum 24-hour notice for inspections.
***The building permit inspection card and the approved plans must be on the jobsite at all times. If the building permit inspection card is not posted, the requested inspection will not be done.
***Permit number & address must be furnished when requesting an inspection.

Residential Districts Minimum Setbacks						
	A	**R-1**	**R-2**	**R-3**	**R-4**	**R-6**
Principal Structures						
Front Street Setback						
Local Street	40' from ROW 73' from CL	40' from ROW 73' from CL	40' from ROW 73' from CL	30' from ROW	25' from ROW	25' from ROW
Collector Street (Does not include county roads)	40' from ROW 73' from CL	40' from ROW 73' from CL	40' from ROW 73' from CL	40' from ROW	30' from ROW	30' from ROW
Arterial Street	135' from CL	135' from CL	135' from CL	40' from ROW	40' from ROW	40' from ROW
County Roads, US & State Highways	135' from CL	135' from CL	135' from CL	135' from CL	135' from CL	135' from CL
Highway 8 Frontage	150' from ROW	150' from ROW	150' from ROW	150' from ROW	150' from ROW	150' from ROW
Side Street Setbacks (corner lots)						
Local Street	40' from ROW 73 from CL	40' from ROW 73' from CL	40' from ROW 73' from CL	20'	20'	15'
Collector Street (Does not include county roads)	40' from ROW 73' from CL	40' from ROW 73' from CL	40' from ROW 73' from CL	30'	25'	20'
Arterial Street	135' from CL	135' from CL	135' from CL	30'	35'	30'
County Roads, US & State Highways	135' from CL	135' from CL	135' from CL	135' from CL	135' from CL	135' from CL
Highway 8	150' from ROW	150' from ROW	150' from ROW	150' from ROW	150' from ROW	150' from ROW
Interior Side Yard Setback	40'	10'	10'	10'	10'	½ height of building
Rear Yard Setback	50'	35'	35'	35'	35'	35'
Maximum Building Height in Stories	3	3	3	3	3	3
Maximum Building Height in Feet	35'	35'	35'	35'	35'	45'
Accessory Structures						
Front Street Setback	Same distance as Principal Structure					
Side Street Setbacks (corner lots)	Same distance as Principal Structure					
Interior Side Yard Setback	40' farm buildings 3' non-farm buildings	3'	3'	3'	3'	3'
Rear Yard Setback	50' farm buildings 3' non-farm buildings	3'	3'	3'	3'	3'
Maximum Building Height in Stories	N/A farm buildings 3 non-farm buildings	1	1	1	1	1
Maximum Building Height in Feet	N/A farm buildings 35' non-farm buildings	25'	25'	18'	18'	18'
Parking, Driveway Setback	5'	5'	5'	5'	5'	15'
No structures can be placed in easements.						
Arterial Streets:	All State and County Highways, East Viking Boulevard (Anoka County to Glen Oak Drive)					
Collector Streets:	Goodview Avenue, Pioneer Road, West Comfort Drive, Innsbrook Avenue, Heath Avenue, East Viking Blvd. (East of Glen Oak Drive), and 250th Street / Greenway Avenue (Washington County to Highway 61 / Forest Boulevard)					

	Septic Tank	Septic Drainfield	Deep Well	Shallow Well	Property Line	OHWL	Wetland
Above Ground Swimming Pool	10'	20'	N/A	N/A	See Zoning District	See Art. VI, Div. 16	20'
In-Ground Swimming Pool	10'	20'	20'	20'	See Zoning District	See Art. VI, Div. 16	20'
Deep Well	50'	50'	N/A	N/A	N/A	50'	N/A
Shallow Well	50'	100'	N/A	N/A	N/A	50'	N/A
Septic Tank	N/A	N/A	50'	50'	10'	See Art. VI, Div. 16	N/A
Septic Drainfield	N/A	N/A	50'	100'	10'	See Art. VI, Div. 16	N/A
Building	10'	20'	3' to overhang of roof	3' to overhang of roof	See Zoning District	See Art. VI, Div. 16	20'

Single Family Dwelling Minimum Plan Requirements. **Complete and accurate information provided on plans submitted will expedite the plan review process. Additional information may be required as determined by the building official.**

1. FOUNDATION PLAN

a) Completely and accurately dimensioned.
b) Footing sizes and locations:
1. Exterior and interior bearing walls
2. Post pad footings
3. Porch and or deck footings
4. Fireplace footings
c) Foundation design:
1.Block foundations - over 5 courses shall have foundation reinforcement detailed, specify block size.
2. Poured foundations - identify wall thickness, reinforcement size and location.
3. Wood foundations – provide complete design
d) Brick ledge and stepped wall locations
e) Door and window location and sizes with U-values
f) Interior wall construction materials
g) Identify cantilevers and method of construction
h) Identify plate material
i) Size of all beams and headers
j) Crawlspace location, access size, wall insulation
k) Floor joist size, spacing and direction
l) Identify room use and location
m) Identify unexcavated areas
n) Location of:
1. furnace
2. water heater
3. sump location
4. smoke detector(s)
5. floor drain(s)
6. bathroom fixtures
o) Location and size of stairs, direction of travel

2. FLOOR PLAN (S)

a) Completely and accurately dimensioned
b) Door and window location and sizes with U-values
c) Brick facing locations
d) Identify cantilevers and method of construction
e) Size all beams and headers
f) Floor joist size, spacing, and direction
g) Identify room use by name
h) Location and size of stairs, direction of travel
i) Attic access size and location
j) Location of fireplace, type of fireplace, hearth size
k) Deck and/or porch construction:
1. Floor joist size and spacing
2. Beam and header sizes
3. Rafter/truss size and spacing
l) Handrail and/or guardrail – height and spacing of stiles or rails
m) Rafter/truss size and spacing
n) Location of furnace flue
o) Smoke detector locations
p) Location of plumbing fixtures and exhaust fans
q) Identify garage firewall construction and self-closing fire door

3. CROSS SECTION (S)

(Provide necessary cross sections which shall be sufficiently detailed to indicate the location, nature, and extent of the work proposed)

a) Footing size – exterior and interior bearing walls
b) Draintile location
c) Foundation type, size, number of courses of block, reinforcing size and location
d) Anchor bolt size and spacing
e) Identify sill plat material
f) Identify floor joist size and spacing
g) Identify flooring material
h) Label foundation insulation and R-value
i) Basement floor thickness
j) Stairway – rise, run, and headroom
k) Exterior wall construction:
1. siding
2. roof sheathing
3. stud size and spacing
4. insulation
5. vapor retarder, air barrier, wind wash barrier locations
6. interior finish
7. sill plate material type
l) Ceiling heights
m) Roof construction:
1. rafter/truss size and spacing
2. roof sheathing
3. attic insulation
4. roof ventilation
5. ceiling finish
6. ceiling vapor retarder
7. ice build-up protection
8. soffits/fascia material
n) Soffit ventilation

4. ELEVATIONS

a) Roof pitch
b) Roof ventilation
c) Roof overhang dimension
d) Siding material (exterior finish materials)
e) Location of doors and windows
f) Location of decks or porches
g) Location and height of chimney and chimney saddles
i) Location of 4" minimum height house numbers

City Of Wyoming - Department Of Building Safety
26885 Forest Blvd., PO Box 188
Wyoming, MN 55092
Phone (651) 462-4947 Fax (651) 462-3938

Application For Building Permit (New Homes)

NOTE: **The plan review fee is charged whether the permit is issued or not.**
There is a penalty for construction prior to issuance of the permit.(All fees must be paid).

Please Print

Site address _____
address city State zip

Owner Name _____ Phone _____

Legal Description Lot____ Block____ Subdivision _____

Sec _____ Twp 33N Range 21W Zone_____

PIN (Tax) Number R 21. _____

Builder/Contractor Name _____ License # _____
PLEASE PRINT

Contact Person _____

Address _____
address city State zip

Phone _____

Architect or Engineer _____
name phone

Type of work New____ Alter____ Repair____ Demo____

Type of Construction Wood ____ Masonry ____ Steel ____

Use of Building _____

Building size _____ x _____ = _____sq. ft.

Number of stories _____ Total floor area _____

Valuation of completed work $ _____ (Labor & Materials)

Desired start date ____/____/____ Estimated completion date ____/____/____

See next page

****

OFFICE USE ONLY

APPROVED / DISAPPROVED By: _____ Date ____/____/____
Official

Permit # _____ Date Paid ____/____/_____ Check # _____

City Of Wyoming - Department Of Building Safety
26885 Forest Blvd., PO Box 188
Wyoming, MN 55092
Phone (651) 462-4947 Fax (651) 462-3938

Application For Building Permit Continued

Site address _____
address city State zip

Please identify all General Contractors and Sub-Contractors to be performing work on this permit:

General: _____ _____ _____
name phone # license #

Roofing: _____ _____ _____
name phone # license #

Plumbing: _____ _____ _____
name phone # license #

Electrical: _____ _____ _____
name phone # license #

Masonry: _____ _____
name phone #

Carpentry: _____ _____
name phone #

Sheetrock: _____ _____
name phone #

Heating: _____ _____
name phone #

Insulation: _____ _____
name phone #

The erosion control fence must be installed before this application is submitted.

The undersigned agrees to do all work in conformance with City Ordinances and herewith declares that all facts and representations on this application are true and correct.

THE UNDERSIGNED AGREES TO NOTIFY THE INSPECTIONS DEPT. WHEN READY FOR INSPECTIONS.

Signature of Applicant: _____ Date: ____/____/____

****

OFFICE USE ONLY

Permit # _____

City Of Wyoming - Department Of Building Safety
26885 Forest Blvd., PO Box 188
Wyoming, MN 55092
Phone (651) 462-4947 Fax (651) 462-3938

APPLICATION FOR **PLUMBING** PERMIT

Date _____ Structure Used As_____

Owner _____ Phone #_____

Site Address _____
city State zip

Legal Description Lot____ Block____ Subdivision _____

Sec _____Twp 33N Range 21W Zone_____PIN (Tax) Number R 21.

Plumbing Contractor Name _____ Phone #_____
PLEASE PRINT

Contact Person_____

Address _____

Job Description _____ Estimated Cost $_____

Number of each item listed below:

Water Closet (toilet)	_____	Dish Washer	_____	Laundry Trays	_____
Bath Tub	_____	Garbage Disposal	_____	Floor Drain	_____
Whirlpool Tub	_____	Kitchen Sink	_____	Sewer Line	_____
Urinal	_____	Drinking Fountain	_____	Water Line	_____
Bidet	_____	Catch Basins	_____	Lawn Sprinkler	_____
Lavatory (bath sink)	_____	Water Softener	_____	Standpipe	_____
Shower	_____	Sewage Ejector	_____	Hose bib	_____
Grease Interceptor	_____	Gas piping	_____	Sewage Ejector	_____
Water Heater Size (Gas or electric)	_____	Oil/Flammable Waste Separator	_____	Garage Floor Drain (Cannot discharge into septic or sewer)	_____

To install **gas piping** you must be licensed with the City of Wyoming License # _____

The undersigned agrees to do all work in conformance with The Minnesota State Building Code and herewith declares that all facts and representations on this application are true and correct.

THE UNDERSIGNED AGREES TO NOTIFY THE INSPECTIONS DEPT. WHEN READY FOR INSPECTIONS.

_____ _____
Signature of Applicant Date

This permit may be issued only to a licensed plumbing contractor or to an owner who occupies the single-family dwelling. MN Statute 326.40

****

OFFICE USE ONLY

Required Inspections: ☐ Rough-In_____ ☐ Final _____

APPROVED / DISAPPROVED By: _____ Date ____/____/____
Official

Permit # _____ Date Paid ____/____/_____ Check # _____

City Of Wyoming - Department Of Building Safety
26885 Forest Blvd., PO Box 188
Wyoming, MN 55092
Phone (651) 462-4947 Fax (651) 462-3938

APPLICATION FOR A **HEATING, VENTILATION & AIR CONDITIONING** PERMIT

Date _____ Structure Used As_____

Owner _____ Phone #_____

Site Address _____
city State zip

Legal Description Lot____ Block____ Subdivision _____

Sec _____Twp 33N Range 21W Zone_____PIN (Tax) Number R 21.

Heating Contractor Name _____ Phone #_____
PLEASE PRINT

Contact Person_____

Address _____

Job Description _____ Estimated Cost $_____

Fuel Source ____ Oil ____Gas (Natural or LP?) ____ Wood/Solid Fuel

Scope of work – Check all that apply

____Furnace	____Hot Water Boiler	____Gas Piping	____Gas Fireplace
____Air Conditioner	____Refrigeration	____Gas Log	____Man. Wood Fireplace
____Ductwork	____Ventilation/Exhaust	____Log Lighter	____Misc. Other_____

Equipment that will be installed:

Type of equipment	Manufacturer	Model No.	Fuel	Flue Dia.	Input/BTU's	CFM	Tons

Air to Air Exchanger Heat / Energy (circle one) Recovery Ventilator

Manufacturer	Model No.	Defrost Deduction	Rated low capacity	Rated high capacity
		%	CFM	CFM

The installation of a solid fuel appliance or an exhaust system of 300 CFM or more will require the submittal of a ventilation worksheet.

Provide the name of the electrical contractor doing the wiring: _____

To install **gas piping** you must be licensed with the City of Wyoming License # ___GL_____

The undersigned agrees to do all work in conformance with The Minnesota State Building Code and herewith declares that all facts and representations on this application are true and correct.

THE UNDERSIGNED AGREES TO NOTIFY THE INSPECTIONS DEPARTMENT WHEN READY FOR INSPECTIONS.

Signed_____ Date: ____/____/____

****

OFFICE USE ONLY ORSAT Test Required ____Yes ____No

Required Inspections: ☐ Rough-In_____ ☐ Gas Line Pressure Test_____ ☐ Final _____

APPROVED / DISAPPROVED By: _____ Date ____/____/____
Official

Permit # _____ Date Paid ____/____/_____ Check # _____

City Of Wyoming - Department Of Building Safety
26885 Forest Blvd., PO Box 188
Wyoming, MN 55092
Phone (651) 462-4947 Fax (651) 462-3938

APPLICATION FOR **DRIVEWAY** PERMIT

Please Print

Requested by _____ Date_____

Address _____
address city State zip

Builder Address _____

_____ Phone _____

Driveway to be on what street _____

Legal Description Lot____ Block____ Subdivision _____

Sec _____Twp 33N Range 21W Zone_____PIN (Tax) Number R 21.

Draw site plan (or attach a copy of the survey) showing property dimensions, driveway, location, and other pertinent information.

Please flag the location of the driveway on the property.

I understand that the driveway is to be completed before the footing inspection is called for. The deposit for a standard culvert is $385; a commercial culvert is $565. **If a culvert is deemed unnecessary you will receive a reimbursement.**

Signature_____ Date_____

****

OFFICE USE ONLY

Culvert required: Yes_____ No_____ Refund Amt. _____

Size and length of culvert:_____Depth of fill at culvert:_____

APPROVED / DISAPPROVED By: _____ Date ____/____/____
Official

Permit # _____ Date Paid ____/____/_____ Check # _____

City Of Wyoming - Department Of Building Safety
26885 Forest Blvd., PO Box 188
Wyoming, MN 55092
Phone (651) 462-4947 Fax (651) 462-3938

APPLICATION FOR
INSTALLATION OF MAILBOX POST ASSEMBLY

Please provide the information requested below. The Street Superintendent and the Building Inspector will review this application to determine whether or not the swing-away mailbox post assembly is required at the site of this new home.

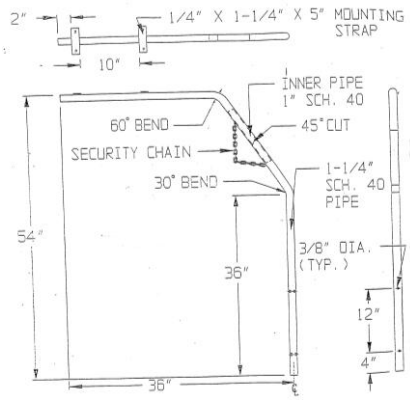

Please Print

Install Mailbox Post Assembly at _____

Lot ____Block ____ Plat/Legal Description _____

_____

_____

Requested by _____ Date _____

Applicant Address _____

_____

Phone _____

I understand/agree that if a City approved breakaway mailbox post assembly is required at the above referenced property it will be supplied and installed by the staff of the City and I will pay a fee of $60.00.

Signature_____ Date_____

****

OFFICE USE ONLY

Mailbox Post Assembly Installed By _____ on ____/____/_____

Permit # _____ Date Paid ____/____/_____ Check # _____

City Of Wyoming - Department Of Building Safety
26885 Forest Blvd., PO Box 188
Wyoming, MN 55092
Phone (651) 462-4947 Fax (651) 462-3938

New Home Ventilation Worksheet

Additions & Alterations – homes built after 1999;
Additions & Alterations – homes built during or after 1994 using MN Energy Code Rules Chapter 7670 and installing a solid fuel (e.g. wood, corn) appliance

Table 501.3.1 – Procedure to determine makeup air quantity for exhaust equipment in dwellings

Use the Appropriate Column to Estimate House Infiltration

	One or multiple power vent or direct vent appliances or no combustion appliances[A]	One or multiple fan-assisted appliances and power vent or direct vent appliances[B]	One atmospherically vented gas or oil appliance one solid fuel appliance[C]	Multiple atmospherically vented gas or oil appliances or solid fuel appliances[D]
1. a) pressure factor (cfm/sf)	0.15	0.09	0.06	0.03
b) Conditioned floor area (sf) (including unfinished basements)				
Estimated House Infiltration (cfm): [1a x 1b]				
2. Exhaust Capacity a) Continuous exhaust-only ventilation system (cfm): (Not applicable to balanced ventilation systems such as HRV)				
b) Clothes dryer	135	135	135	135
c) 80% of largest exhaust rating (cfm): (not applicable if recirculating system or if powered makeup air is electrically interlocked and matched to exhaust)				
d) 80% of next largest exhaust rating (cfm): (not applicable if recirculating system or if powered makeup air is electrically interlocked and matched to exhaust)	Not applicable			
Total Exhaust Capacity (cfm): [2a+2b+2c+2d]				
3. Makeup Air Requirement a) Total Exhaust Capacity (from above)				
b) Estimated House Infiltration (from above)				
Makeup Air Quantity (cfm): [3a - 3b] (if value is negative, no makeup air is needed)				
4. For Makeup Air Opening Sizing, refer to Table 501.4.2				

[A] Use this column if there are other than fan-assisted or atmospherically vented gas or oil appliances or if there are no combustion appliances.
[B] Use this column if there is one fan-assisted appliance per venting system. Other than atmospherically vented appliances may also be included.
[C] Use this column if there is one atmospherically vented (other than fan-assisted) gas or oil appliance per venting system or one solid fuel appliance.
[D] Use this column if there are multiple atmospherically vented gas or oil appliances using a common vent or if there are atmospherically vented gas or oil appliances and solid fuel appliances.

Permit # _____ Address _____

_____ _____ _____/_____/_____
Builder/Designer Signature Date

City Of Wyoming - Department Of Building Safety
26885 Forest Blvd., PO Box 188
Wyoming, MN 55092
Phone (651) 462-4947 Fax (651) 462-3938

Table 501.3.2

Makeup Air Opening Sizing Table for New and Existing Dwellings

	One or multiple power vent or direct vent appliances or no combustion appliances[A]	One or multiple fan-assisted appliances and power vent or direct vent appliances[B]	One atmospherically vented gas or oil appliance one solid fuel appliance[C]	Multiple atmospherically vented gas or oil appliances or solid fuel appliances[D]	Passive makeup air opening duct diameter [E, F, G]
Type of opening or system	(cfm)	(cfm)	(cfm)	(cfm)	(inches)
Passive Opening	1-36	1-22	1-15	1-9	3
Passive Opening	37-66	23-41	16-28	10-17	4
Passive Opening	67-109	42-66	29-46	18-28	5
Passive Opening	110-163	67-100	47-69	29-42	6
Passive Opening	164-232	101-143	70-99	43-61	7
Passive Opening	233-317	144-195	100-135	62-83	8
Passive Opening with Motorized Damper	318-419	196-258	136-179	84-110	9
Passive Opening with Motorized Damper	420-539	259-332	180-230	111-142	10
Passive Opening with Motorized Damper	540-679	333-419	231-290	143-179	11
Powered Makeup Air [H]	>679	>419	>290	>179	Not applicable

[A] Use this column if there are other than fan-assisted or atmospherically vented gas or oil appliances *or* if there are no combustion appliances.
[B] Use this column if there is one fan-assisted appliance per venting system. Other than atmospherically vented appliances may also be included.
[C] Use this column if there is one atmospherically vented (other than fan-assisted) gas or oil appliance per venting system *or* one solid fuel appliance.
[D] Use this column if there are multiple atmospherically vented gas or oil appliances using a common vent *or* if there are atmospherically vented gas or oil appliances *and* solid fuel appliance(s).
[E] An equivalent length of 100 feet of round smooth metal duct is assumed. Subtract 40 feet for the exterior hood and ten feet for each 90-degree elbow to determine the remaining length of straight duct allowable.
[F] If flexible duct is used, increase the duct diameter by one inch. Flexible duct shall be stretched with minimal sags.
[G] Barometric dampers are prohibited in passive makeup air openings when any atmospherically vented appliance is installed.
[H] Powered makeup air shall be electrically interlocked with the largest exhaust system.

City Of Wyoming - Department Of Building Safety
26885 Forest Blvd., PO Box 188
Wyoming, MN 55092
Phone (651) 462-4947 Fax (651) 462-3938

(Example) New Home Ventilation Worksheet *(Example)*

Additions & Alterations – homes built after 1999;
Additions & Alterations – homes built during or after 1994 using MN Energy Code Rules Chapter 7670 and installing a solid fuel (e.g. wood, corn) appliance

Table 501.3.1 – Procedure to determine makeup air quantity for exhaust equipment in dwellings
Use the Appropriate Column to Estimate House Infiltration

	House A	*House B*	*House C*	*House D*
	One or multiple power vent or direct vent appliances or no combustion appliances[A]	One or multiple fan-assisted appliances and power vent or direct vent appliances[B]	One atmospherically vented gas or oil appliance one solid fuel appliance[C]	Multiple atmospherically vented gas or oil appliances or solid fuel appliances[D]
1. a) pressure factor (cfm/sf)	0.15	0.09	0.06	0.03
b) Conditioned floor area (sf) (including unfinished basements)	*2,000 square feet*	*2,000 square feet*	*2,000 square feet*	*2,000 square feet*
Estimated House Infiltration (cfm): [1a x 1b]	*300 cfm*	*180 cfm*	*120 cfm*	*60 cfm*
2. Exhaust Capacity a) Continuous exhaust-only ventilation system (cfm): (Not applicable to balanced ventilation systems such as HRV)	*0 cfm (HRV installed)*	*0 cfm (HRV installed)*	*100 cfm*	*0 cfm (HRV installed)*
b) Clothes dryer	135	135	135	135
c) 80% of largest exhaust rating (cfm): (not applicable if recirculating system or if powered makeup air is electrically interlocked and matched to exhaust)	*(300 cfm x 80%)* *240 cfm*	*(300 cfm x 80%)* *240 cfm*	*(300 cfm x 80%)* *240 cfm*	*(300 cfm x 80%)* *240 cfm*
d) 80% of next largest exhaust rating (cfm): (not applicable if recirculating system or if powered makeup air is electrically interlocked and matched to exhaust)	Not applicable	*(150 cfm x 80%)* *120 cfm*	*(150 cfm x 80%)* *120 cfm*	*(150 cfm x 80%)* *120 cfm*
Total Exhaust Capacity (cfm): [2a+2b+2c+2d]	*(0 + 135 + 240 + 0)* *375 cfm*	*(0 + 135 + 240 + 120)* *495 cfm*	*(100 + 135 + 240 + 120)* *595 cfm*	*(0 + 135 + 240 + 120)* *495 cfm*
3. Makeup Air Requirement a) Total Exhaust Capacity (from above)	*375 cfm*	*495 cfm*	*595 cfm*	*495 cfm*
b) Estimated House Infiltration (from above)	*300 cfm*	*180 cfm*	*120 cfm*	*60 cfm*
Makeup Air Quantity (cfm): [3a - 3b] (if value is negative, no makeup air is needed)	*(375 – 300)* *75 cfm*	*(495 – 180)* *315 cfm*	*(595 – 120)* *475 cfm*	*(495 – 60)* *435 cfm*
4. For Makeup Air Opening Sizing, refer to Table 501.4.2	*Passive Opening* *5 inches diameter*	*Passive Opening with Motorized Damper* *10 inches diameter*	*Powered Makeup Air*	*Powered Makeup Air*

[A] Use this column if there are other than fan-assisted or atmospherically vented gas or oil appliances or if there are no combustion appliances.
[B] Use this column if there is one fan-assisted appliance per venting system. Other than atmospherically vented appliances may also be included.
[C] Use this column if there is one atmospherically vented (other than fan-assisted) gas or oil appliance per venting system or one solid fuel appliance.
[D] Use this column if there are multiple atmospherically vented gas or oil appliances using a common vent or if there are atmospherically vented gas or oil appliances and solid fuel appliances.

Permit # B-05-XXX Address XXXX 256th Street

Bent Nail Construction _____ ____/____/____
Builder/Designer Signature Date

City Of Wyoming - Department Of Building Safety
26885 Forest Blvd., PO Box 188
Wyoming, MN 55092
Phone (651) 462-4947 Fax (651) 462-3938

The table below is provided to assist you in completing Table 501.3.1 (Procedure to determine makeup air quantity for exhaust equipment in dwellings). The table shows examples of four different houses, each being the same size but with different mechanical equipment installed. These houses correspond to the example Table 501.3.1 on the following page.

The table below also has a column for, "Your House", use this column to fill in the information you will need to complete Table 501.3.1. Please note: when you complete Table 501.3.1, you will be filling in only one of the columns, based on the mechanical equipment that will be, or is, installed in "Your House".

	House A	*House B*	*House C*	*House D*	Your House
Conditioned Floor Area (including unfinished basement)	*2,000 square feet*	*2,000 square feet*	*2,000 square feet*	*2,000 square feet*	
Furnace	*Gas Direct Vent*	*Gas Fan assisted (Category 1)*	*Gas Power vent*	*Gas Atmospherically vented*	
Boiler	*None*	*Gas Power vented*	*None*	*None*	
Water heater	*Electric*	*Gas Power vented*	*Gas Atmospherically vented*	*Gas Atmospherically vented*	
Fireplace/Hearth - Gas	*None*	*Gas Direct vented*	*None*	*None*	
Solid Fuel Appliance	*None*	*None*	*None*	*Wood Fireplace*	
Continuous Exhaust Only Ventilation System	*None*	*None*	*100 cfm*	*None*	
Kitchen Exhaust Fan	*300 cfm*	*300 cfm*	*300 cfm*	*300 cfm*	
Largest Bathroom Exhaust Fan	*120 cfm*	*120 cfm*	*120 cfm*	*120 cfm*	
Other Exhaust Fan (s) (This would also include a central vacuum cleaner system that exhausts to the outdoors or into the garage)					
Balanced Ventilation System (such as HRV or ERV)	*HRV*	*ERV*	*None*	*HRV*	

City Of Wyoming - Department of Public Works
26490 Faxton Avenue
Wyoming, MN 55092
Phone (651) 462-0580 Fax (651) 462-0581

PERMIT APPLICATION FOR **SEWER & WATER CONNECTION**

Date: _____ Structure used as: _____

Owner _____ Phone #_____

Site Address _____
Address city State zip

Pipe Layer: _____ License # _____
PLEASE PRINT

Contact Person _____

Address _____
Address city State zip

Phone _____

Plumbing Code Compliance Bond _____

Job Description _____ Est. Cost $ _____

Existing Buildings

Interior plumbing work needed? _____ (A separate plumbing permit is required)

Plumbing Contractor _____ License # _____

Contact Person _____

Phone _____

THE UNDERSIGNED AGREES TO NOTIFY PUBLIC WORKS WHEN READY FOR INSPECTIONS.

_____ _____
Signature of Applicant Date

The Water Meter is supplied by the city at no charge and remains the property of the city; contact Public Works at (651) 462-0580 to receive the meter.

****

OFFICE USE ONLY

Sewer Access Charge (SAC) $_____

Water Access Charge (WAC) $_____

Connection Inspection Fee $_____

Total Fees $_____

APPROVED / DISAPPROVED By: _____ Date ____/____/____
Official

Permit # _____ Date Paid ____/____/_____ Check # _____

City Of Wyoming - Department Of Building Safety
26885 Forest Blvd., PO Box 188
Wyoming, MN 55092
Phone (651) 462-4947 Fax (651) 462-3938

NOTICE

Erosion Control Requirements

An Erosion Control Inspection is required before the building permit will be issued. The intent is to limit dirt tracked onto the street and washed into adjacent waterways or property. At this erosion control inspection, a silt fence shall be properly installed 12 feet from the back of the curb or at the top of the back slope of the ditch. This silt fence shall start at the street on each side of the driveway, and then extend towards the side yard lot lines at a minimum of 80 feet (or stop at the property line if less than 80 feet). Corner lots must also have silt fence installed along the street without driveway access a minimum of 80 feet from the corner.

All fences shall be continuously maintained until such time that the turf is established in the yard. A $900.00 escrow will be collected at the time the building permit is issued. 90% of the escrow will be returned after 4 feet of sod has been established along the boulevard.

All contractors are required to use the driveway access. There shall be no driving over the curb or through the ditch.

Additional silt fence may be required. The requirements for additional erosion control will be handled on a lot-by-lot basis.

*Additional silt fence required at-*_____
Office Use Only

12" of silt fence fabric set in notch and covered by compacted backfill.

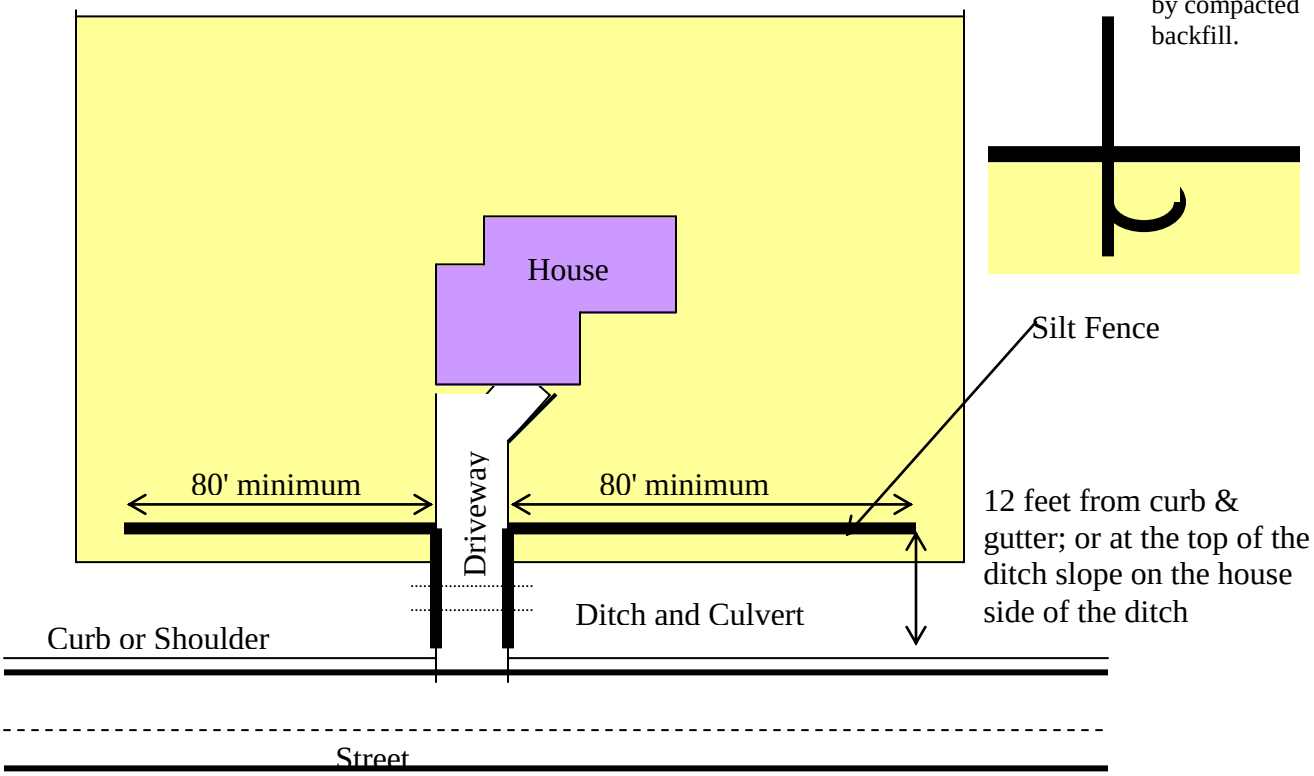

I have read and understand the Notice of Erosion Control requirements and will comply with these requirements.

_____ _____ (____)_____
Permit Applicant Date Phone Number

City Of Wyoming - Department Of Building Safety
26885 Forest Blvd., PO Box 188
Wyoming, MN 55092
Phone (651) 462-4947 Fax (651) 462-3938

Standard Details – Siltation Fence

STANDARD INSTALLATION REGULAR FLOW

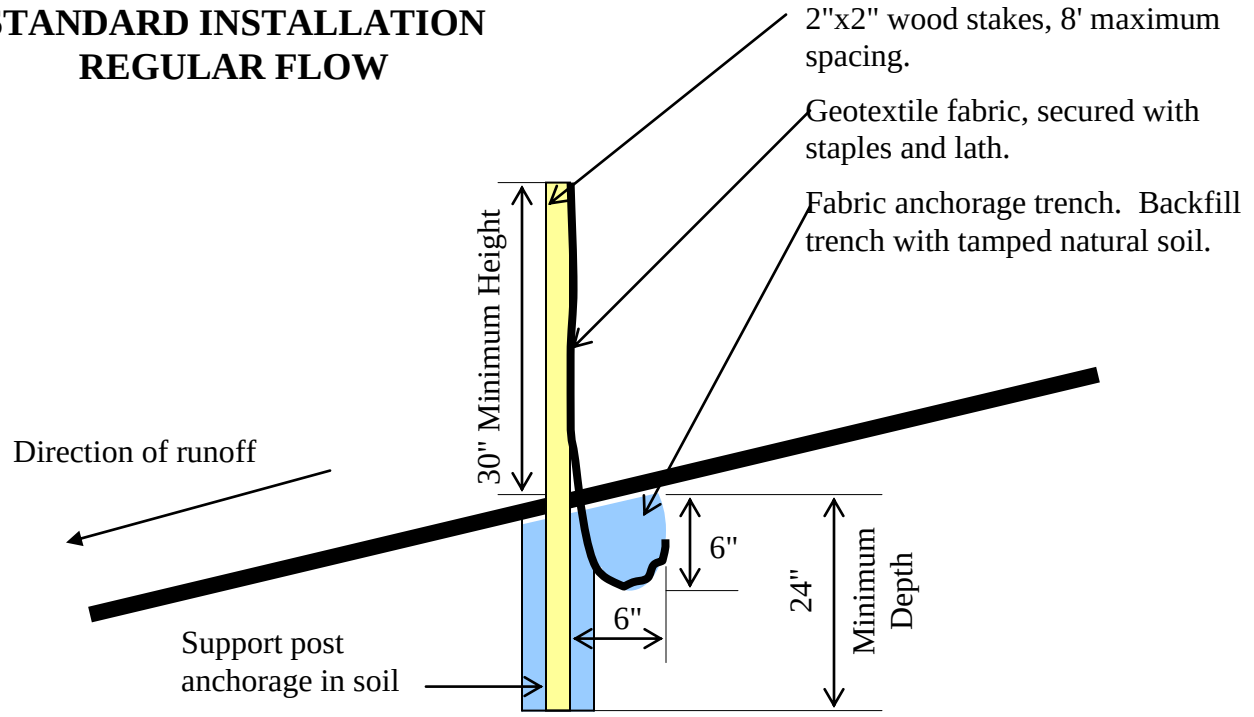
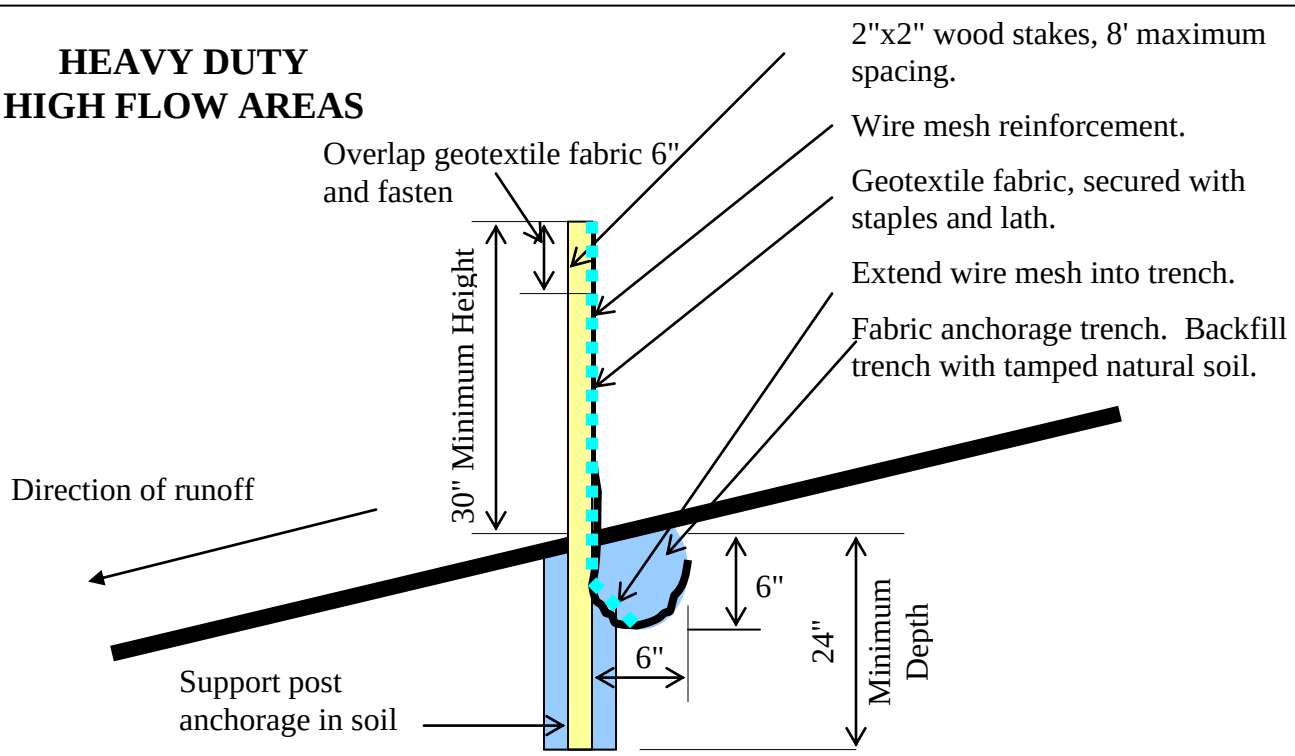
HEAVY DUTY HIGH FLOW AREAS